Multi-Level Segment Fusion Based on Adaptive Time-Window Selection for Multimodal Personality-Aware Elderly Depression Detection

Yuyun Liu
School of Biological Science and Medical Engineering, Southeast University
Nanjing, China
liuyuyun@seu.edu.cn

Kaifei Zhang
School of Biological Science and Medical Engineering, Southeast University
Nanjing, China
220242613@seu.edu.cn

Yinghao Ma
School of Biological Science and Medical Engineering, Southeast University
Nanjing, China
220242615@seu.edu.cn

Xiaolin Xu
School of Biological Science and Medical Engineering, Southeast University
Nanjing, China
xuxiaolin@seu.edu.cn

Tianhua Qi
School of Biological Science and Medical Engineering, Southeast University
Nanjing, China
qitianhua@seu.edu.cn

Wenming Zheng
Key Laboratory of Child Development and Learning Science of Ministry of Education, Southeast University
Nanjing, China
wenming_zheng@seu.edu.cn

Cheng Lu*
School of Biological Science and Medical Engineering, Southeast University
Nanjing, China
cheng.lu@seu.edu.cn

Yuan Zong*
School of Biological Science and Medical Engineering, Southeast University
Nanjing, China
xhzongyuan@seu.edu.cn

Abstract

Major Depressive Disorder (MDD) is a prevalent and severe psychiatric disorder, and its detection remains challenging due to the complexity and variability of its symptoms. Traditional single-modality methods often fail to capture the full spectrum of depressive cues, which has led to the rise of multimodal methods. The ACM Multimedia 2025 "Multimodal Personality-Aware Depression Detection Challenge" (MPDD 2025) aims to advance the development of more accurate depression detection models by incorporating multimodal data. In this paper, we proposed a Multi-Level Segment Fusion Based on Adaptive Time-Window Selection (MSF-ATS) method for the MPDD-Elderly Track. To address the challenge of sparse and transient depressive symptoms, we fuse segment-level classifications to obtain subject-level classifications. An adaptive time-window selection based on mean class variance is employed to choose the window with the smallest variance for more stable detection results. Our method achieved an average score of 0.8576 on the MPDD 2025 official test set, significantly outperforming the baseline score of 0.6675.

CCS Concepts

• **Computing methodologies** → **Artificial intelligence**; • **Applied computing** → **Health informatics**; • **Information systems** → **Multimedia information systems**.

Keywords

depression detection, multimodal fusion, subject-level classification, time-window selection

ACM Reference Format:
Yuyun Liu, Kaifei Zhang, Yinghao Ma, Xiaolin Xu, Tianhua Qi, Wenming Zheng, Cheng Lu, and Yuan Zong. 2025. Multi-Level Segment Fusion Based on Adaptive Time-Window Selection for Multimodal Personality-Aware Elderly Depression Detection. In *Proceedings of the 33rd ACM International Conference on Multimedia (MM '25), October 27–31, 2025, Dublin, Ireland.* ACM, New York, NY, USA, 7 pages. https://doi.org/10.1145/3746027.3762064

1 Introduction

Major Depressive Disorder (MDD) is one of the most common and deadliest psychiatric disorders worldwide, affecting hundreds of millions of people across all age groups [10]. Determining whether a person has depression and assessing its severity can effectively control the condition and prevent further deterioration. However, due to the complexity and variety of symptoms associated with MDD, traditional single-modality methods often struggle to capture the full range of depressive cues [3, 4]. This limitation has led to

*Corresponding Authors

Permission to make digital or hard copies of all or part of this work for personal or classroom use is granted without fee provided that copies are not made or distributed for profit or commercial advantage and that copies bear this notice and the full citation on the first page. Copyrights for components of this work owned by others than the author(s) must be honored. Abstracting with credit is permitted. To copy otherwise, or republish, to post on servers or to redistribute to lists, requires prior specific permission and/or a fee. Request permissions from permissions@acm.org.
MM '25, Dublin, Ireland
© 2025 Copyright held by the owner/author(s). Publication rights licensed to ACM.
ACM ISBN 979-8-4007-2035-2/2025/10
https://doi.org/10.1145/3746027.3762064

growing interest in multimodal methods for depression detection. By integrating multiple data sources, such as audio, visual, and textual information, multimodal depression detection models capture a broader range of depressive cues, thereby improving the overall performance of depression detection tasks [2, 16, 23].

To accelerate the clinical translation of multimodal depression detection methods, ACM Multimedia 2025 organized the "Multimodal Personality-Aware Depression Detection Challenge" (MPDD 2025) [7]. This competition innovatively introduces the dimension of personality awareness by providing each participant with structured identity information including demographic attributes and the Big Five personality traits, filling the gap in previous databases where such data was missing. The competition comprises two sub-tracks: the MPDD-Elderly Track, which targets the elderly population with data from real clinical interview records and the MPDD-Young Track, which focuses on younger subjects with data derived from reading tasks and self-reported questionnaires. The competition aims to encourage researchers to develop more accurate multimodal depression detection models.

In the process of automated depression detection, how to appropriately segment the data into time windows is a key challenge. Research has shown that the choice of data segments directly impacts the performance of depression detection models [15]. Some studies support using shorter segments to capture subtle and rapid changes in depression signals [21]. However, short segments are more susceptible to noise interference, potentially leading the model to overfit irrelevant information, thus affecting detection performance. In contrast, longer segments provide more contextual information, helping to enhance the model's stability and reduce sensitivity to brief noise [5]. However, long time windows also have limitations, as they may obscure some brief but crucial depressive signals. This reflects the trade-off between granularity and robustness. How to reasonably choose the time window for data remains a significant challenge in current depression detection. Moreover, depressive symptoms in clinical interviews are often not consistently present throughout the entire interview [21]. Therefore, a multi-level segment fusion is needed to integrate the segment-based detection results, forming a more comprehensive and robust subject-level depression detection framework.

To address these challenges, this paper focuses on the MPDD-Elderly Track and proposes a Multi-Level Segment Fusion Based on Adaptive Time-Window Selection (MSF-ATS) method. We classify the audio and visual feature segments in two time windows according to the competition setup. Then, we combine the segment-level classification results of different features through weighted fusion to obtain subject-level classifications for each time window. Subsequently, we propose an adaptive time-window selection based on mean class variance (MCV). By comparing the MCV at different time windows, we select the time window with the smallest variance across the two time window divisions in the competition achieving more stable detection results. Experimental results show that our method achieves an average score of 0.8576 on the MPDD 2025 official test set, significantly outperforming the official baseline score of 0.6675, thus proving the effectiveness of the proposed method in elderly depression detection tasks.

2 Method

The MSF-ATS is shown in Figure 1. The first part is subject-level classification, which utilizes audio, visual, and textual modalities, along with multi-level segment fusion to obtain subject-level classifications for each time window. The second part is adaptive time-window selection based on MCV, which selects the most suitable time scale by comparing the MCV at different time windows to obtain more stable and accurate detection results.

2.1 Subject-Level Classification

Depressive symptoms in clinical interviews typically appear only in brief segments rather than persisting throughout an entire conversation. To capture these sparse cues and generate clinically meaningful subject-level classification, we design a subject-level classification module that aggregates segment-level classifications across multiple modalities. In common segment-level settings, all audio or video fragments from the same participant are assigned the same label [8, 20]; however, when an explicit identity indicator is absent, the model may fail to exploit cross-fragment consistency. To address this, we concatenate a text-derived subject identity embedding to each video or audio feature segment, providing an explicit affiliation signal that encourages the model to treat segments from the same participant coherently.

All input features in this module are drawn from the fixed feature sets provided for the MPDD 2025 Challenge. Audio features include Wav2Vec [19] embeddings and Mel-Frequency Cepstral Coefficients (MFCCs) [17]. Visual features are extracted using DenseNet [11], ResNet [9], and OpenFace [1]. Text features representing the subject identity embedding are obtained by encoding subject-level demographic and clinical attributes with a pretrained RoBERTa [14] model and using the [CLS] token representation.

We process $M = 5$ time-series feature streams from the audio and video modalities. For subject s, window size $\tau \in \{1\text{s}, 5\text{s}\}$, and segment index j, the m-th stream input is denoted as $X_{s,\tau,j,m} \in \mathbb{R}^{T_{s,\tau,j,m} \times D_m}$, where $T_{s,\tau,j,m}$ represents the time dimension and D_m represents the feature dimension. For brevity, we drop the indices s, τ, j when the context is clear and write X_m.

To obtain a temporally informed fixed-length summary, we adopt the Attention Statistics Pooling (ASP) method proposed by Okabe et al [18]. Each sequence is first processed through a fully connected layer, followed by the application of a hyperbolic tangent activation function:

$$F_m = \tanh(WX_m + b), \tag{1}$$

Here, W and b are the weights and biases of the fully connected layer, and $\tanh(\cdot)$ is the hyperbolic tangent function. The output $F_m \in \mathbb{R}^{T_m \times D_m}$ is the original feature set after nonlinear activation.

We compute attention weights over time steps using a learnable query vector $p_m \in \mathbb{R}^{D_m}$ as follows:

$$w_m = \text{softmax}\big(F_m \cdot p_m\big), \tag{2}$$

where the softmax operates along the temporal dimension. The $\cdot$ represents matrix multiplication, and the resulting $w_m \in \mathbb{R}^{T_m}$ indicates the importance of each frame.

Temporal attention weights modulate the original sequence via broadcasted element-wise multiplication:

$$X_m^{\text{att}} = w_m \odot X^m, \tag{3}$$

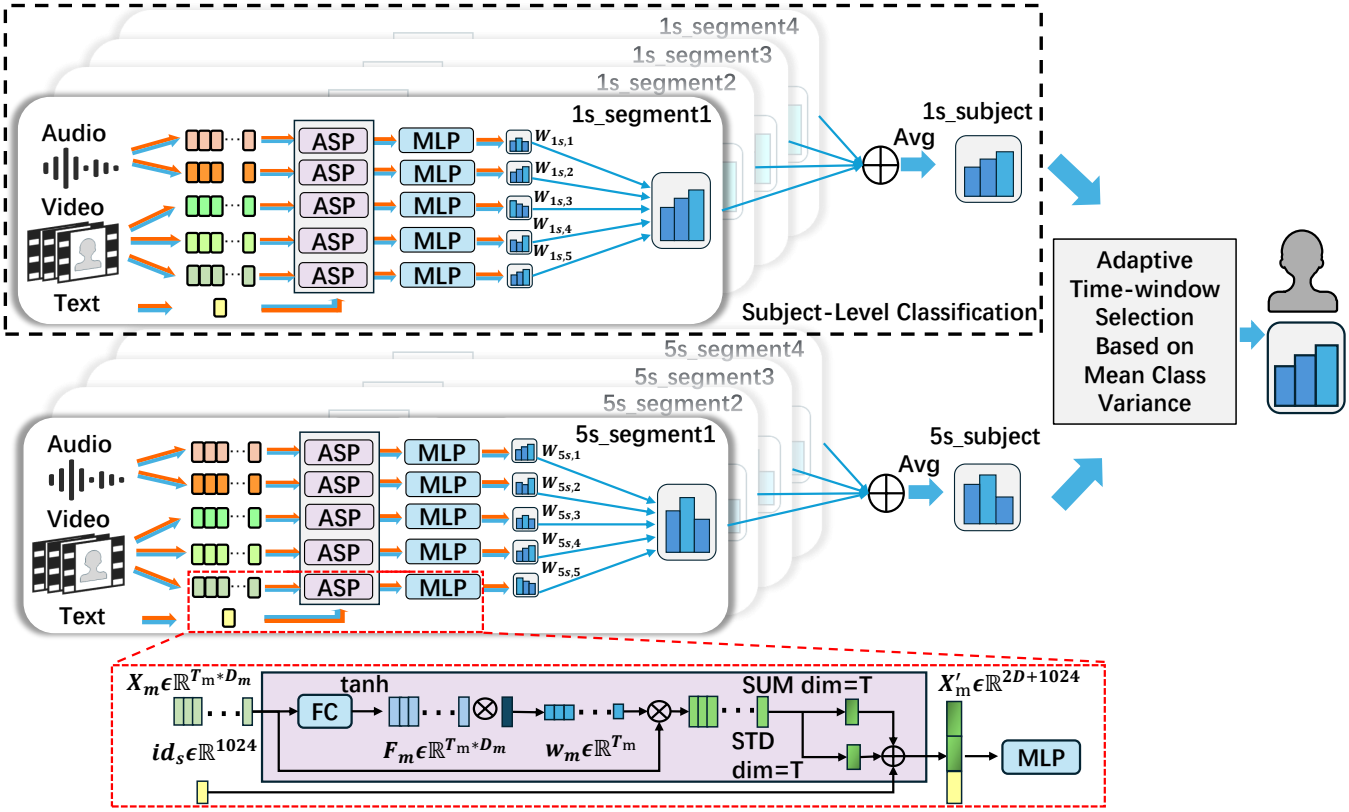

Figure 1: The Overall Architecture of Multi-Level Segment Fusion Based on Adaptive Time-Window Selection (MSF-ATS). Orange lines represent the data flow during training, while blue lines represent the data flow during inference.

Here $\odot$ denotes element-wise multiplication with broadcasting of w_m over the feature dimension D_m, yielding $X_m^{\text{att}} \in \mathbb{R}^{T_m \times D_m}$ that highlights informative regions.

We then apply global sum pooling and standard-deviation pooling along time and concatenate the two statistics:

$$x_m^{\text{pool}} = \left[\text{SUM}(X_m^{\text{att}}) \; ; \; \text{STD}(X_m^{\text{att}}) \right] \in \mathbb{R}^{2D_m}, \tag{4}$$

Each operator produces a D_m dimensional vector; concatenation yields $x_m^{\text{pool}} \in \mathbb{R}^{2D_m}$ that preserves both overall magnitude and temporal variability.

To inject subject identity, we concatenate the pooled vector with the identity embedding:

$$x'_m = [\, x_m^{\text{pool}} ; id_s \,] \in \mathbb{R}^{2D_m+1024}, \tag{5}$$

where $id_s \in \mathbb{R}^{1024}$ is the subject identity for subject s.

Next, we apply a multilayer perceptron (MLP) to obtain the segment-level classification:

$$P_m = \text{MLP}_m(x'_m). \tag{6}$$

Then, we fuse the M stream predictions for segment (s, τ, j) using nonnegative reliability weights $W_{\tau,m}$. Each feature's segment-level classification is aggregated into a subject-level classification:

$$P_{s,\tau}^{\text{sub}} = \frac{1}{J_{s,\tau}} \sum_{j=1}^{J_{s,\tau}} \left(\sum_{m=1}^{M} W_{\tau,m} \, P_{s,\tau,j,m} \right), \tag{7}$$

where $P_{s,\tau,j,m}$ is the prediction from the m-th stream for subject s and segment j at window size τ. The term $J_{s,\tau}$ represents the total number of segments for subject s under window size τ. The resulting $P_{s,\tau}^{\text{sub}}$ is the subject-level classification for subject s under window size τ.

2.2 Adaptive Time-window Selection Based on Mean Class Variance

To improve robustness across temporal granularities, we propose an adaptive time-window selection based on MCV. This strategy selects the time-window length that yields a more robust subject-level classification for each classification task.

We define the predicted probability for subject s in class c for task t under window τ as $P_{s,\tau,t,c}^{\text{sub}}$. Next, we compute the class-wise mean probability for task t under window τ:

$$\bar{P}_{\tau,t,c} = \frac{1}{N_{\tau,t,c}} \sum_{s=1}^{N_{\tau,t,c}} P_{s,\tau,t,c}^{\text{sub}}, \tag{8}$$

where $\bar{P}_{\tau,t,c}$ is the mean predicted probability for class c in task t at window τ. $N_{\tau,t,c}$ represents the total number of subjects for each class c, task t and window size τ.

We then compute the corresponding class-wise variance:

$$\sigma^2_{\tau,t,c} = \frac{1}{N_{\tau,t,c}} \sum_{s=1}^{N_{\tau,t,c}} \left(P^{\text{sub}}_{s,\tau,t,c} - \bar{P}_{\tau,t,c} \right)^2, \tag{9}$$

where $\sigma^2_{\tau,t,c}$ represents the variance of the predicted probabilities for class c in task t at window τ.

The MCV for task t at window τ is computed as:

$$\text{MCV}_{1s,t} = \frac{1}{C_t} \sum_{c=1}^{C_t} \sigma^2_{\tau_1,t,c}, \tag{10}$$

$$\text{MCV}_{5s,t} = \frac{1}{C_t} \sum_{c=1}^{C_t} \sigma^2_{\tau_5,t,c}, \tag{11}$$

Here, $\text{MCV}_{1s,t}$ and $\text{MCV}_{5s,t}$ represent the MCV computed at time windows of $\tau \in \{1\text{s}, 5\text{s}\}$, with each task t.

A lower MCV indicates more consistent predictions for task t at temporal resolution τ. To select the optimal window for each task, we define:

$$\widehat{\tau}_t = \begin{cases} 1\text{s}, & \text{if } \text{MCV}_{1s,t} < \text{MCV}_{5s,t}, \\ 5\text{s}, & \text{otherwise}, \end{cases} \tag{12}$$

where $\widehat{\tau}_t$ denotes the selected optimal window size for task t based on the comparison of the MCV values at 1s and 5s temporal resolutions. By selecting the window with the lower MCV for each task, we can choose a more compact time window for classification

2.3 Loss function

Following prior work that demonstrated the effectiveness of combining Cross-Entropy (CE) and Focal Loss for addressing class imbalance in classification tasks [7, 13, 22], we adopt a similar composite loss function during the feature-stream training stage. Specifically, the total loss is defined as:

$$\mathcal{L}_{\text{total}} = \lambda_{\text{CE}} \cdot \mathcal{L}_{\text{CE}} + \lambda_{\text{Focal}} \cdot \mathcal{L}_{\text{Focal}}, \tag{13}$$

where λ_{CE} and λ_{Focal} are hyperparameters that control the contribution of each component.

The CE loss and Focal Loss are given as:

$$\mathcal{L}_{\text{CE}} = -\frac{1}{N} \sum_{n=1}^{N} \sum_{c=1}^{C} y_{n,c} \, \log p_{n,c}, \tag{14}$$

$$\mathcal{L}_{\text{Focal}} = -\frac{1}{N} \sum_{n=1}^{N} \sum_{c=1}^{C} \alpha_c \, (1 - p_{n,c})^{\gamma} \, y_{n,c} \, \log p_{n,c}. \tag{15}$$

Here, C is the total number of class c, and N is the total number of samples in this batch. $y_{n,c}$ denotes the ground-truth label of sample n for class c, and $p_{n,c}$ is the corresponding softmax probability. γ is the focusing parameter, and α_c is the class-specific balancing factor. Both γ and α_c are empirically set according to the data distribution.

3 Experiments

3.1 Database

The MPDD 2025 [7] Challenge hosted at ACM Multimedia 2025 provides a standardized benchmark to advance research in automated depression detection. It consists of two tracks: MPDD-Elderly which focuses on depression detection in elderly subjects and MPDD-Young which targets younger adults. This paper focuses on MPDD-Elderly which aims to classify depressive symptoms in older adults using multimodal behavioral signals and demographic features.

The Challenge consists of three classification levels: binary classification (normal vs depressed), ternary classification (normal, mildly depressed, severely depressed), and quinary classification (normal, mildly depressed, moderately depressed, moderately severe, severe). The dataset consists of 337 labeled training samples, 227 official test samples, and an additional subset of 78 early-released test samples for model selection. Model training is strictly confined to the training set, while the early-released subset is used for model selection. The final evaluation is performed on the complete official test set. For clarity, we refer to the early-released test subset as the validation set throughout the rest of this paper.

Because of privacy and ethical constraints, direct access to raw audio, video, and textual data is prohibited; consequently, the challenge organizers supply only a set of pre-extracted multimodal features for model development. These features span three complementary streams: the visual modality is extracted through DenseNet [11], ResNet [9], and OpenFace [1]. DenseNet and ResNet are convolutional neural networks used for deep facial representation, while OpenFace captures dynamic facial features such as action units, gaze direction, and head movements. The audio modality includes Wav2Vec [19] embeddings, MFCCs [17] and OpenSMILE [6]. Wav2Vec is a self-supervised model based on the Transformer architecture that learns context-aware representations from raw audio signals, while MFCCs describe the spectral characteristics of audio. OpenSMILE is a feature extraction toolkit used to capture prosodic cues, emotion, and speaker characteristics. The text modality includes subject-level metadata, such as demographic and clinical attributes, provided in a structured JSON format. These descriptions are processed with a pretrained RoBERTa model, from which the [CLS] token embedding represents individual characteristics in a fixed-length vector.

3.2 Experimental setup

The experiments were conducted using the PyTorch framework, with model training performed using the Adam [12] optimizer. In the first stage, all training and evaluation processes were executed on an NVIDIA GeForce RTX 4090D GPU. For each unimodal feature, the training and hyperparameter tuning process was conducted as follows: First, we performed a comprehensive hyperparameter search, exploring different learning rates, including 1×10^{-3}, 1×10^{-4} and 1×10^{-5}. The weight for the CE loss was fixed at 1.0, while the weight for the Focal Loss was tuned across different ranges: from 0.01 to 0.1 (step size 0.001), from 0.1 to 1 (step size 0.1), from 1 to 10 (step size 1) and from 10 to 100 (step size 10). Additionally, the γ value for Focal Loss was set to 2, 3, and 4. The α was also adjusted based on the classification task: for binary

classification, $[0.25, 0.75]$; for ternary classification, $[0.15, 0.25, 0.6]$; and for quinary classification, $[0.05, 0.1, 0.15, 0.25, 0.45]$.

The classification layer uses an MLP with the following structure: $[2D_m + 1024, 1024, 512, 128, 64, \text{task_label}]$, where task_label denotes the number of classes for each specific subtask. The training configuration for each subtask includes a batch size of 256 and 200 training epochs.

The model that achieved the highest validation score—defined as the average of both weighted (w) and unweighted (u) Accuracy (Acc) and F1 scores was selected and saved. Specifically, the evaluation Score is computed as follows:

$$\text{Acc}^w = \frac{1}{K}\sum_{k=1}^{K}\text{Acc}^w_{\text{task}_k}, \tag{16}$$

$$\text{Acc}^u = \frac{1}{K}\sum_{k=1}^{K}\text{Acc}^u_{\text{task}_k}, \tag{17}$$

where K is the total number of tasks, and $\text{Acc}^w_{\text{task}_k}$ and $\text{Acc}^u_{\text{task}_k}$ are the weighted and unweighted accuracy for task k.

$$\text{F1}^w = \frac{1}{K}\sum_{k=1}^{K}\text{F1}^w_{\text{task}_k}, \tag{18}$$

$$\text{F1}^u = \frac{1}{K}\sum_{k=1}^{K}\text{F1}^u_{\text{task}_k}, \tag{19}$$

where $\text{F1}^w_{\text{task}_k}$ and $\text{F1}^u_{\text{task}_k}$ are the weighted and unweighted F1 scores for task k.

$$\text{Acc} = \frac{\text{Acc}^w + \text{Acc}^u}{2}, \tag{20}$$

$$\text{F1} = \frac{\text{F1}^w + \text{F1}^u}{2}, \tag{21}$$

$$\text{Score} = \frac{\text{Acc} + \text{F1}}{2}. \tag{22}$$

This score is used as the criterion for selecting the optimal model parameters across all tasks.

Under the condition that the set $\{W_{\tau,m}\}_{m=1}^{M}$ is satisfied, we perform a search with a step size of 0.01 from 0 to 1 to identify the optimal feature fusion coefficient that maximizes the subject-level classification score. This search is conducted on the validation set to determine the optimal weight configuration for fusing each feature's segment-level classification into a subject-level classification feature fusion coefficient, which will then be applied during the testing phase.

3.3 Results and Analysis

We evaluated the segment-level classification score of each feature on the validation set across different tasks. Due to the loss not converging when using OpenSMILE features in our method, we excluded this feature. The performance of the remaining features is shown in Table 1. In the visual modality, DenseNet outperformed other visual features in four out of the six tasks. Specifically, it achieved a score of 0.8785 on the 1s binary (1s_2) task, 0.7018 on the 1s quinary (1s_5) task, 0.8952 on the 5s binary (5s_2) task, and 0.7721 on the 5s quinary (5s_5) task. ResNet delivered the best performance on the 1s ternary (1s_3) task with a score of 0.6979, and on the 5s ternary (5s_3) task with a score of 0.7020. In contrast, OpenFace consistently underperformed compared to other visual features across all tasks, especially in the two quinary tasks, where it achieved lower scores of 0.4753 on the 1s_5 task and 0.4509 on the 5s_5 task. In the audio modality, MFCCs outperformed Wav2Vec in five out of six tasks, achieving scores of 0.8662, 0.6798, 0.6600, 0.8569, and 0.6600 in the 1s_2, 1s_3, 1s_5, 5s_2, and 5s_5 tasks, respectively. Wav2Vec surpassed MFCCs only in the 5s_3 task, where it achieved a score of 0.6902. The results show that deep learning-based visual features outperform traditional handcrafted features in segment-level classification, while MFCCs outperform Wav2Vec features for audio-based detection.

Table 1: Segment-Level Classification Score of Each feature on the Validation Set Across Different Tasks

Feature	1s_2	1s_3	1s_5	5s_2	5s_3	5s_5
DenseNet	0.8785	0.6476	0.7018	0.8952	0.6532	0.7721
ResNet	0.8371	0.6979	0.5772	0.8371	0.7020	0.6048
OpenFace	0.8347	0.5394	0.4753	0.7116	0.4958	0.4509
Wav2Vec	0.7647	0.6300	0.5987	0.7597	0.6902	0.6062
MFCCs	0.8662	0.6798	0.6600	0.8569	0.6283	0.6600

Table 2: Subject-Level Classification Score of Multi-Level Segments Fusion on the Validation Set Across Different Tasks

Task	Score
1s_2	1.0000
1s_3	0.9038
1s_5	0.7306
5s_2	1.0000
5s_3	0.9230
5s_5	0.8509

After obtaining the best model for each feature segment-level classification on the validation set, we aggregated the multi-level segments into subject-level classification. The results as shown in Table 2. For binary classification tasks, both the 1s_2 and 5s_2 tasks achieved perfect scores of 1.0000, demonstrating the model's strong discriminative capability on simpler tasks. For the ternary classification tasks, the 1s_3 and 5s_3 tasks scored 0.9038 and 0.9230, respectively, showing a significant improvement over all unimodal features. In the more complex quinary classification tasks, the 1s_5 and 5s_5 tasks achieved scores of 0.7306 and 0.8509, with the 5s_5 task showing an improvement of more than 7 percentage points compared to the best-performing unimodal feature. These results indicate that, compared to unimodal segment-level classification models, our fusion strategy more effectively leverages the classification results from multiple features as cues. By assigning different weights to each feature and subsequently aggregating segment-level classifications into subject-level classifications, this strategy not only fully leverages the advantages of multimodal information but also integrates the depression classification results from different segments for more accurate subject-level depression detection, thereby significantly improving the model's performance across various classification tasks.

Table 3: Optimal Fusion Weights and Score for Each Task on the Test Set

Modality	1s_2	1s_3	1s_5	5s_2	5s_3	5s_5
DenseNet	0.26	0.06	1.00	0.06	0.00	0.19
MFCCs	0.24	0.19	0.00	0.30	0.00	0.00
OpenFace	0.42	0.03	0.00	0.59	0.57	0.81
ResNet	0.06	0.12	0.00	0.05	0.26	0.00
Wav2Vec	0.02	0.60	0.00	0.00	0.17	0.00
Score	0.9707	0.8102	0.7191	1.0000	0.7996	0.7627

For each task, the top 10 configurations with the highest validation scores were selected for test evaluation, and the configuration yielding the best test score was chosen as the final setting. Table 3 presents the optimal fusion weights and score for each task on the test set. In contrast to its performance in segment-level classification, OpenFace, which performs the worst in single-segment classification, achieves the highest fusion weight in subject-level classification. For example, the fusion weight for OpenFace exceeds 0.5 in the 5s_2, 5s_3, and 5s_5 tasks. The results show that, compared to other features, OpenFace may help address the sparsity of depressive symptoms during interviews, making it a valuable feature for assessing a subject's depressive state in tasks with longer time windows.

Table 4: Impact of Time Window Selection on Classification Score in the Test Set

Strategy	Score
1s	0.8333
5s	0.8541
MCV	**0.8576**

Table 4 presents the score of fixed time windows such as 1s and 5s, as well as the MCV-based adaptive time window selection with multiple time windows on the test set. The results show that MCV achieved the highest score of 0.8576, outperforming depression detection in both the 1s and 5s windows. This indicates that using multiple time-window segments and a proper time window selection strategy helps enhance the effectiveness of the depression detection model.

Table 5: Leaderboard Score Comparison on the Test Set

Submission	Score
Baseline	0.6675
1st Place	0.8623
2nd Place	0.8580
Ours (3rd)	0.8576

Finally, we compared our method with official leaderboard submissions from the MPDD 2025 challenge. As shown in Table 5, our method achieved the test score of 0.8576, ranking third and significantly surpassing the baseline [7] score of 0.6675. The top two teams scored 0.8623 and 0.8580, respectively, with only minimal differences from our result, further demonstrating the competitiveness of our model. These results highlight the effectiveness of MSF-ATS and its potential for real-world clinical depression detection.

4 Conclusion

In this paper, we propose the MSF-ATS method, applied to the MPDD-Elderly track of the MPDD 2025 challenge. To address the intermittent nature of depressive symptoms during clinical interviews, our method first performs segment-level classification on audio and visual features and aggregates these segment-level classification results into subject-level classifications to form multi-level segment fusion. This approach effectively utilizes multimodal information while considering the intermittent nature of depressive symptoms at the segment level, generating more stable subject-level detection. Furthermore, we introduce an adaptive time-window selection based on mean class variance, allowing the model to dynamically adjust the optimal temporal windows based on stability. Experimental results show that our method achieved an average score of 0.8576 on the MPDD 2025 official test set, significantly outperforming the baseline score, thus validating the effectiveness of our approach. In the future, we will consider integrating more features to enhance the model's depression detection capability. Additionally, we will investigate the effect of slice duration on depression detection and optimize the time-window selection mechanism to advance the development of multimodal depression diagnosis toward clinical deployment.

Acknowledgments

This work was supported in part by the NSFC under the Grant 62476057, in part by the YESS Program by CAST under the Grant 2023QNRC001, in part by the ASFC under the Grant 2023Z071069003, in part by the Zhishan Young Scholar Program of Southeast University, in part by the YESS Program by JSAST under the Grant JSTJ-2023-XH033, in part by the China Postdoctoral Science Foundation under the Grant 2023M740600, and in part by the Jiangsu Province Excellent Postdoctoral Program.

References

[1] Tadas Baltrušaitis, Peter Robinson, and Louis-Philippe Morency. 2016. Openface: an open source facial behavior analysis toolkit. In *2016 IEEE winter conference on applications of computer vision (WACV)*. IEEE, 1–10.

[2] Jian Chen, Yuzhu Hu, Qifeng Lai, Wei Wang, Junxin Chen, Han Liu, Gautam Srivastava, Ali Kashif Bashir, and Xiping Hu. 2024. IIFDD: Intra and inter-modal fusion for depression detection with multi-modal information from Internet of Medical Things. *Information Fusion* 102 (2024), 102017.

[3] Tao Chen, Richang Hong, Yanrong Guo, Shijie Hao, and Bin Hu. 2022. MS^2-GNN: Exploring GNN-based multimodal fusion network for depression detection. *IEEE Transactions on Cybernetics* 53, 12 (2022), 7749–7759.

[4] Jeffrey F Cohn, Nicholas Cummins, Julien Epps, Roland Goecke, Jyoti Joshi, and Stefan Scherer. 2018. Multimodal assessment of depression from behavioral signals. *The Handbook of Multimodal-Multisensor Interfaces: Signal Processing, Architectures, and Detection of Emotion and Cognition-Volume 2* (2018), 375–417.

[5] Sri Harsha Dumpala, Sebastian Rodriguez, Sheri Rempel, Mehri Sajjadian, Rudolf Uher, and Sageev Oore. 2022. Detecting depression with a temporal context of speaker embeddings. *Proc. AAAI SAS* (2022).

[6] Florian Eyben, Martin Wöllmer, and Björn Schuller. 2010. Opensmile: the munich versatile and fast open-source audio feature extractor. In *Proceedings of the 18th ACM international conference on Multimedia*. 1459–1462.

[7] Changzeng Fu, Zelin Fu, Qi Zhang, Xinhe Kuang, Jiacheng Dong, Kaifeng Su, Yikai Su, Wenbo Shi, Junfeng Yao, Yuliang Zhao, et al. 2025. The First MPDD Challenge: Multimodal Personality-aware Depression Detection. *arXiv preprint arXiv:2505.10034* (2025).

[8] Zhuojin Han, Yuanyuan Shang, Zhuhong Shao, Jingyi Liu, Guodong Guo, Tie Liu, Hui Ding, and Qiang Hu. 2023. Spatial–temporal feature network for speech-based depression recognition. *IEEE Transactions on Cognitive and Developmental Systems* 16, 1 (2023), 308–318.

[9] Kaiming He, Xiangyu Zhang, Shaoqing Ren, and Jian Sun. 2016. Deep residual learning for image recognition. In *Proceedings of the IEEE conference on computer vision and pattern recognition*. 770–778.

[10] Helen Herrman, Vikram Patel, Christian Kieling, Michael Berk, Claudia Buchweitz, Pim Cuijpers, Toshiaki A Furukawa, Ronald C Kessler, Brandon A Kohrt, Mario Maj, et al. 2022. Time for united action on depression: a Lancet–World Psychiatric Association Commission. *The Lancet* 399, 10328 (2022), 957–1022.

[11] Gao Huang, Zhuang Liu, Laurens van der Maaten, and Kilian Q Weinberger. 2017. Densely connected convolutional networks. In *Proceedings of the IEEE Conference on Computer Vision and Pattern Recognition*.

[12] Diederik P. Kingma and Jimmy Ba. 2015. Adam: A Method for Stochastic Optimization. *International Conference on Learning Representations (ICLR)* (2015). https://arxiv.org/abs/1412.6980

[13] Zhaoyang Li, Cheng Lu, Xiaolin Xu, Kaifei Zhang, Yujia Gu, Banghua Li, Yuan Zong, and Wenming Zheng. 2025. Enhancing Task-Specific Feature Learning with LLMs for Multimodal Emotion and Intent Joint Understanding. In *ICASSP 2025 - 2025 IEEE International Conference on Acoustics, Speech and Signal Processing (ICASSP)*. 1–2. doi:10.1109/ICASSP49660.2025.10890555

[14] Yinhan Liu, Myle Ott, Naman Goyal, Jingfei Du, Mandar Joshi, Danqi Chen, Omer Levy, Mike Lewis, Luke Zettlemoyer, and Veselin Stoyanov. 2019. Roberta: A robustly optimized bert pretraining approach. *arXiv preprint arXiv:1907.11692* (2019).

[15] Danila Mamontov, Sebastian Zepf, Alexey Karpov, and Wolfgang Minker. 2024. Cross-Cultural Automatic Depression Detection Based on Audio Signals. In *International Conference on Speech and Computer*. Springer, 309–323.

[16] Kaining Mao, Wei Zhang, Deborah Baofeng Wang, Ang Li, Rongqi Jiao, Yanhui Zhu, Bin Wu, Tiansheng Zheng, Lei Qian, Wei Lyu, et al. 2022. Prediction of depression severity based on the prosodic and semantic features with bidirectional LSTM and time distributed CNN. *IEEE transactions on affective computing* 14, 3 (2022), 2251–2265.

[17] Brian McFee, Colin Raffel, Dawen Liang, Daniel PW Ellis, Matt McVicar, Eric Battenberg, and Oriol Nieto. 2015. librosa: Audio and music signal analysis in python. *SciPy* 2015 (2015), 18–24.

[18] Koji Okabe, Takafumi Koshinaka, and Koichi Shinoda. 2018. Attentive statistics pooling for deep speaker embedding. *arXiv preprint arXiv:1803.10963* (2018).

[19] Steffen Schneider, Alexei Baevski, Ronan Collobert, and Michael Auli. 2019. wav2vec: Unsupervised pre-training for speech recognition. *arXiv preprint arXiv:1904.05862* (2019).

[20] Burak Taşcı. 2024. Multilevel hybrid handcrafted feature extraction based depression recognition method using speech. *Journal of Affective Disorders* 364 (2024), 9–19.

[21] Jinhan Wang, Vijay Ravi, Jonathan Flint, and Abeer Alwan. 2024. Speechformer-ctc: Sequential modeling of depression detection with speech temporal classification. *Speech communication* 163 (2024), 103106.

[22] Xiaolin Xu, Cheng Lu, Zhaoyang Li, Yuyun Liu, Yinghao Ma, Jiahao Luo, Yuan Zong, and Wenming Zheng. 2025. Reliable Learning From LLM Features for Multimodal Emotion and Intent Joint Understanding. In *ICASSP 2025 - 2025 IEEE International Conference on Acoustics, Speech and Signal Processing (ICASSP)*. 1–2. doi:10.1109/ICASSP49660.2025.10888958

[23] Wei Zhang, En Zhu, Juan Chen, and YunPeng Li. 2024. MDDR: Multi-modal Dual-Attention aggregation for Depression Recognition. In *Proceedings of the 32nd ACM International Conference on Multimedia*. 321–329.